2026

EQUIPMENT CATALOG

Effective August 1, 2026

PITCO®

SMART SOLSTICE FEATURES

NOW AVAILABLE ON COLD ZONE FRYERS

AUTOMATIC FILTRATION
Filter at the press of a button! No doors to open or levers to pull. Increase safety and reduce labor time.

AUTOMATIC OIL TOP OFF
Keep your oil at optimal depth at all times! Auto top off replenishes oxidizing oil with fresh oil as needed.

SMART PUMP AND DRAIN
Increased width 3" drain and 10gpm pump reduces filter cycle time by up to 25%.

POWERED WASTE AND FRESH OIL MANAGEMENT
Effortless oil fills and dumps with automatic input and output connections to third party oil systems.

JUG IN BOX (JIB) MANAGEMENT
Sensors detect "JIB" oil levels and warn operators when oil dips below 20%.

SmartOIL SENSOR
The sensor reads the properties of the oil during a filter cycle. This data allows the user to know exactly when to re-use oil and when it's time for a change. SOS works smarter to increase your oil life!

CONTROL UPGRADE
10.1" Open Kitchen enabled OneTouch screen with automatic tracking and filter data functions.

EXTEND **OIL LIFE** | INCREASE **PRODUCTION** | **SAVE** TIME AND LABOR

Features available on all SSH55, SSH60, SSH60W and SSH75 models.

Oil absorption may vary depending upon oil type, product type and cooking temperature.

Thinking of Switching to **Solid Shortening?**

Pitco fryers are adaptable to many types of shortening, both liquid and solid.

CONTROL SYSTEM
It's important to bring solid shortening up to heat gradually through a Melt Cycle. Melt Cycles are programmable through solid state, digital, computer and OneTouch controls. On a touch screen, choose the "Solid" option under Equipment Settings > General > Melt Cycle.

HEAT TAPE
Pitco offers several options for waste oil handling. Heat tape is used internally for use with solid shortening. Additional heat tape charges apply in cases of solid shortening.

TOOLS AND ACCESSORIES
Solid shortening can harden when cooled. Use of a clean out rod is important in cases where cooled solid shortening may clog drain pipes.

STAY SAFE
As always, wear heat resistant gloves when working with any type of hot shortening. Adjust oil levels as needed.

TABLE OF CONTENTS

Fryer Control Options 1-2

ROV (REDUCED OIL VOLUME) FRYERS

SELVRF/SGLVRF 4
SSHLV/SELV 6

GAS FRYERS

(ROV) Reduced Oil Volume Fryers 6-7
Solstice High Efficiency Supreme Series 8
Solstice Gas Fryers 14
Solstice Supreme Gas Fryer Systems 15
Solstice Gas Fryer Systems 17
Economy Gas Fryers 19
Standard Solstice Gas Fryers 19
Countertop Gas Fryer 19
Energy Star Gas Fryers 19
MEGAFRY - High Volume, High Efficiency 20
Flat Bottom Fryers 21
Solstice Filter Drawer Filtration System 23
Crisp'N Hold 24

ELECTRIC FRYERS

(ROV) Reduced Oil Volume Rack Fryers 4
(ROV) Reduced Oil Volume Fryers 6-7
Solstice Electric Fryers 12
Solstice Electric Fryer Systems 16
Energy Star Electric Fryer 19
Solstice Filter Drawer Filtration System 23
Holding & Merchandising 24

PREPACKAGED FILTRATION SYSTEMS

Prepackaged SSH Fryer Systems with Filtration 15
Prepackaged SE Fryer Systems with Filtration 16
Prepackaged SG Fryer Systems with Filtration 17

FILTRATION SYSTEMS & OIL HANDLING

Integrated Oil Management Systems 22-23
Portable Filtration 22
Fat Vat 22
Solstice Filter Drawer Filtration System, SG, SSH, SE, FBG, SGM 23

WATER COOKERS

Solstice Rethermalizer - Gas, Electric and Counter Top 26
Pasta Cookers - Solstice Supreme Gas 27
Pasta Cookers - Solstice Supreme Electric 27

OPTIONS & ACCESSORIES

Flexible Connectors, Cleaning Accessories, Filter Accessories, Filter Paper 28
Institutional Packages 28
Tank Covers, Casters, Dump Stations 29
Splash Guards & Work Shelves 29
Basket and Wire Goods 30-31

WARRANTY

Extended Warranty 32
Original Economy Equipment Limited Warranty 33-34

FIND A REP

Sales Reps 35-36

ORDERING INFORMATION

Ordering Information 37
Returns & International Orders 37

CONTACT US

[P] +1 603.225.6684 | **[F]** +1 603.225.8472

www.pitco.com

Orders: orderpitco@pitco.com

Administrative Office: 553 Route 3A | Bow, NH 03304

Mail: P. O. Box 501 | Concord, NH 03302

Freight: 39 Sheep Davis Rd | Pembroke, NH 03275

** PRICES AND SPECIFICATIONS SUBJECT TO CHANGE WITHOUT NOTICE **

CE approvals for individual models may not be available with all options or in all areas. Consult the factory for more information.

FRYER CONTROL OPTIONS

MILLIVOLT CONTROL

- Manual pilot ignition
- No power required for operation

SOLID STATE CONTROL - Available with Matchless Ignition

- Greater Temperature Control - plus or minus 1°F reactivity from set temperature
- Better recovery, increased production
- Melt Cycle
- Boil Out
- Back up option allows the Solid State control to function as a back up to the Digital Controller, 12 Button, MultiZone or Profile Computer Control

DIGITAL CONTROL - Available with Matchless Ignition

- Greater Temperature Control - plus or minus 1°F reactivity from set temperature
- Better recovery, increased production
- Melt Cycle
- Countdown timer with alarm
- Cook time and temperature setting
- Ease of use "touch on/touch off" - 2 product buttons
- Solid State Control (above) can be added as a backup control

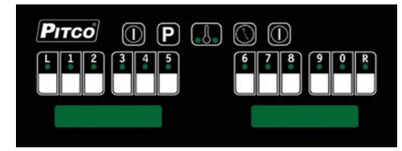

12 BUTTON COMPUTER CONTROL - Available with Matchless Ignition

- Greater Temperature Control - plus or minus 1°F reactivity from set temperature
- Better recovery, increased production
- Melt Cycle
- Ease of Use: 12 product buttons
- Programmable temperature, cook, shake, and hold functions; volume levels
- Anti-boil over mode - prevents damage to controls during this procedure
- Consistent Product - elastic time
- "Lifeguard" system limits cycling of fryer controls to prolong fryer component life
- Instant On - Controller calls for heat as soon as a timer is activated instead of waiting for the temperature drop.
- Solid State Control (above) can be added as a backup control

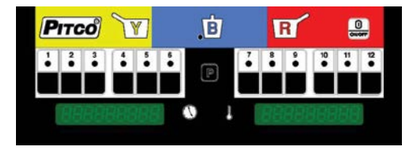

MULTI-ZONE COMPUTER CONTROL

All the features of the 12 Button plus:

- Perfect for 3 basket configuration
- Simple two step process: Select product, then select zone
- Different color zone for each basket
- Eliminates confusion of which product started cooking first
- Solid State Control (above) can be added as a backup control

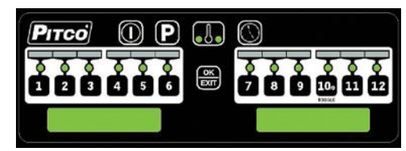

PROFILE COMPUTER CONTROL

All the features of the 12 button control plus:

- The ability to set multiple temperature profiles
- Change temperatures automatically during the cook cycle for the perfect quality product
- Solid State Control (above) can be added as a backup control
- Menu strip windows for product button identification

OneTouch

THE EASY TO USE ADVANCED CONTROLLER FOR YOUR FRYER

Language support for your locations across the nation & around the globe, store your recipes & product cook times on your fryer for the right taste every time.

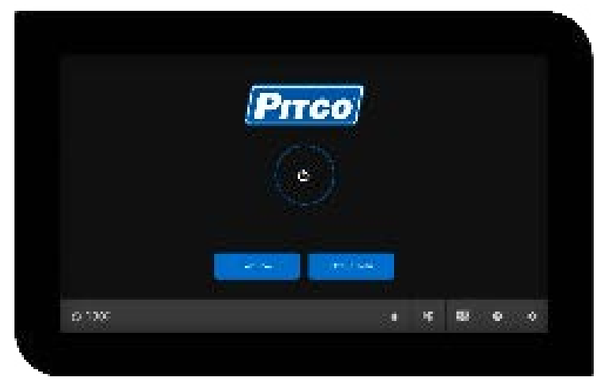

10.1" hlui OneTouch Screen

- On-screen brand logo
- Brightness adjustment
- Product key graphics
- USB port for data transfer

Data Tracking

- Hours of operation
- Cook cycles
- Filter cycles

SOLSTICE SUPREME
ROV
REDUCED OIL VOLUME

REDUCED OIL VOLUME RACK FRYER

GAS & ELECTRIC

AUTOMATIC RACK LIFTS AVAILABLE AS ADD-ON, MANUAL RACKS COME STANDARD

- Auto Top Off (ATO) is standard and included
- Reduce operating costs
- Increase safety for operators who directly handle fresh/waste oil
- Reduces carbon footprint:
  - Less processed oil from first fill
  - Fewer deliveries or waste pickups
  - Better for the workplace
- Maintain high production
- 76lbs. of oil, 15lbs. oil reserve
- Longer oil life
- 10 Gallon/minute filter pump
- 1.5" Oil drain opening
- Auto top-off oil options available or simply refill with the push of a button

CONTROLLER OPTIONS:

Touchscreen Control

- Brightness adjustment
- Product key graphics
- USB port for data transfer
- Language support & recipe storage

12 Button Computer Control - Matchless Ignition

- Greater Temperature Control - plus or minus 1°F reactivity from set temperature
- Better recovery, increased production
- Melt Cycle
- Ease of Use: 12 product buttons
- Programmable temperature, cook, shake, and hold functions; volume levels
- Anti-boil over mode
- Consistent Product - elastic time
- Instant On - Controller calls for heat as soon as a timer is activated instead of waiting for the temperature drop

SELVRF-2/FD shown with filter drawer, casters, and 12 Button Computer

AVAILABLE WITH

SOS SmartOIL SENSOR

Know precisely when to re-use oil & when to change it to ensure top quality food & save on oil costs

REDUCED OIL VOLUME FRYER (ROV)

ROV RACK FRYER - ELECTRIC

	Model Number	Oil Capacity (Lbs.)	Power (kW)	Frying Area	Cook Depth	12 Button Computer (C)	OneTouch Control (OT)	Approx Ship Wt. (lbs.)	Approx Cubic Feet
CE	SFSELVRF	76	17	14"x 18"	10"	$62,279	$69,205	415	56
CE	SELVRF-2/FD	76 each	34	14"x 18" each	10"	$92,134	$99,060	930	112

ROV RACK FRYER - GAS

	Model Number	Oil Capacity (Lbs.)	BTUs/Hr	Frying Area	Cook Depth	12 Button Computer (C)	OneTouch Control (OT)	Approx Ship Wt. (lbs.)	Approx Cubic Feet
CE	SFSGLVRF	76	125,000	14"x 18"	10"	$62,279	$69,205	415	56
CE	SGLVRF-2/FD	76 each	250,000	14"x 18" each	10"	$92,134	$99,060	930	112

Additional basket and wire goods available on pages 30-31

ROV RACK FRYER OPTIONS & ACCESSORIES

Description	List Price
Bulk Oil Option	$1,800 per pot
Optional casters in lieu of standard legs	$889 each
Automatic Basket Lifts	$11,205 per fryer

Automatic Filtration Cycles

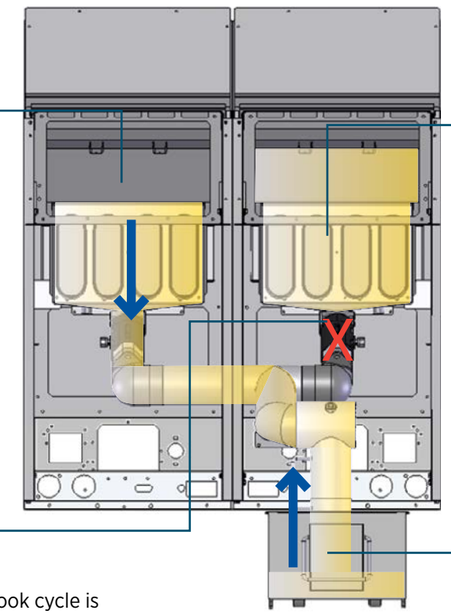

1 When the first cook cycle is complete the oil will automatically drain into the filter pan.

2 If the second cook tank cook cycle is complete before the filtration cycle is done the fryer will alert the user the filter pan is in use.

3 Once the filtration cycle is complete the oil will return to the fryer tank and automatically reheat to the set temperature.

4 Once all oil is returned to the first tank, the second tank will automatically begin to drain for filtration.

CE approvals for individual models may not be available with all options or in all areas. Consult the factory for more information.

SOLSTICE SUPREME
ROV
REDUCED OIL VOLUME

REDUCED OIL VOLUME FRYER

GAS & ELECTRIC

FULLY AUTOMATED FILTRATION SYSTEM AVAILABLE

- Reduce operating costs
- Increase safety for operators who directly handle fresh/waste oil
- Reduces carbon footprint:
  - Less processed oil from first fill
  - ENERGY STAR® Certified
  - Fewer deliveries or waste pickups
  - Better for the workplace
- Maintain high production
- Up To 50% reduction in oil
- Longer oil life
- Filter in as little as 3-4 minutes
- Auto top-off oil options available or simply refill with the push of a button

CONTROLLER OPTIONS:

Touchscreen Control

- Brightness adjustment
- Product key graphics
- USB port for data transfer
- Language support & recipe storage

12 Button Computer Control - Matchless Ignition

- Greater Temperature Control - plus or minus 1°F reactivity from set temperature
- Better recovery, increased production
- Melt Cycle
- Ease of Use: 12 product buttons
- Programmable temperature, cook, shake, and hold functions; volume levels
- Anti-boil over mode
- Consistent Product - elastic time
- Instant On - Controller calls for heat as soon as a timer is activated instead of waiting for the temperature drop

OPEN KITCHEN by SiteSage

*** Some models available with Open Kitchen Technology**

10 YEAR FRY POT WARRANTY

SSHLV14-2 shown with filter drawer, casters, and touch screen

Available with unique 18" wide tank

AVAILABLE WITH

SOS SmartOIL SENSOR

Know precisely when to re-use oil & when to change it to ensure top quality food & save on oil costs

REDUCED OIL VOLUME FRYER (ROV)

REDUCED OIL VOLUME FRYERS - STANDARD WITH 12 BUTTON COMPUTER CONTROL - ELECTRIC

Model Number	Oil Capacity (Lbs.)	Cook Area (W x D)	KW/Hr	Fryer with FD	Add On Fryer
SELV14-C/FD	30	13.5" x 14.8"	17	$51,989	$27,208
SELV184-C/FD	40	17.5" x 14.8"	17	$54,908	$30,042
SELV14T-C/FD	15ea	6.3" x 14.8"	8.5ea	$62,309	$37,228
SELV14X-C/FD	30	13.5" x 14.8"	14	$49,103	$24,406
SELV184X-C/FD	40	17.5" x 14.8"	14	$52,023	$27,240
SELV14TX-C/FD	15ea	6.3" x 14.8"	7ea	$59,424	$34,426

REDUCED OIL VOLUME FRYERS - STANDARD WITH 12 BUTTON COMPUTER CONTROL - GAS

ENERGY STAR® Qualified Models are marked with an asterisk (*)

Model Number	Oil Capacity (Lbs.)	Cook Area (W x D)	BTUs/Hr	Fryer with FD	Add On Fryer
SSHLV14-C/FD*	32	13" x 13.6"	72,500	$54,057	$29,232
SSHLV184R-C/FD	42	17" x 13.6"	100,000	$55,592	$30,707
SSHLV14T-C/FD	17ea	6.9" x 13.6"	37,000ea	$62,936	$37,838

OPTIONS & ACCESSORIES

Description	List Price
Upgrade to OneTouch Control (OT) from Standard 12 Button - full pot	$2,663
Upgrade to OneTouch Control (OT) from Standard 12 Button - split pot	$2,877
SOS - Requires 12 Button or Touch Screen Controls. One Sensor per Battery	$6,219
Auto Top-off - add per full pot	$1,795
Auto Top-off - add per split pot	$1,939
Auto Filtration - per full pot	$5,024
Auto Filtration - per split pot	$5,425
Stainless Steel Back (SS) Per Unit	$1,341
Basket Lifts (Add 100 lbs to fryer weight. Basket lifts add 4-1/2" to overall depth of fryer). *Only one needed for dual tank fryers.	$6,041
PFW-1 Built-in Foodwarmer, 750watt for BNB Solstice Bread and Batter Dump Station	$2,110
SELVBNB14 or SSHLVBNB14	$3,245
SSHLVBNB14 BASKET TOWER	$6,586
PCFLV14 Crisp-N-Hold	$17,689
PCFLV18 Crisp-N-Hold	$18,174
Power Cord and Plug - 6 foot, 4 Gauge power cord, with NEMA 15-60P plug Option available for Domestic SELV models, 14KW and 17KW, 3 phase, 208V or 240V fryers only	$859

CASTERS (1/2 SET PER CABINET, MINIMUM 1 SET)

Number of Fryers	1	2	3	4	5	6
LIST PRICE	$787	$787	$1,180	$1,574	$1,968	$2,361

CASTERS (1/2 SET PER CABINET, MINIMUM 1 SET)

Number of Fryers	1 or 2	3	4	5	6
LIST PRICE	$889	$1,334	$1,778	$2,223	$2,667

CE approvals for individual models may not be available with all options or in all areas. Consult the factory for more information.

REDUCED OIL VOLUME FRYER SYSTEMS - ELECTRIC

Model Number	WITH AUTO TOP OFF AND AUTO FILTRATION WITH 12 BUTTON COMPUTER CONTROL (C)	WITH AUTO TOP OFF AND AUTO FILTRATION WITH ONETOUCH CONTROL (OT)
SELV14C-2/FD	$93,650	$98,976
SELV14TC-2/FD	$115,385	$121,140
SELV14C-3/FD	$128,492	$136,481
SELV14C-4/FD	$163,335	$173,987
SELV14C-2/14T/FD	$139,360	$147,563
SELV14C/14T-2/FD	$150,228	$158,645
SELV14C-2/14T-2/FD	$185,070	$196,150
SELV14C/184/FD	$96,571	$101,897

REDUCED OIL VOLUME FRYER SYSTEMS - GAS

Model Number	WITH AUTO TOP OFF AND AUTO FILTRATION WITH 12 BUTTON COMPUTER CONTROL (C)	WITH AUTO TOP OFF AND AUTO FILTRATION WITH ONETOUCH CONTROL (OT)
SSHLV14C-2/FD*	$97,790	$103,116
SSHLV14TC-2/FD	$116,639	$116,639
SSHLV14C-3/FD*	$134,702	$142,691
SSHLV14C-4/FD*	$169,818	$180,470
SSHLV14C-2/14T/FD	$144,126	$149,881
SSHLV14C/14T-2/FD	$153,553	$156,430
SSHLV14C-2/14T-2/FD	$190,464	$196,219
SSHLV14C/184/FD	$99,325	$104,650

SOLSTICE FILTER DRAWER

See Pages 22 & 23 for Solstice Filter Drawer and Oil Reclamation Options

SF-SELV184

CE approvals for individual models may not be available with all options or in all areas. Consult the factory for more information.

SOLSTICE SUPREME - SSH

GAS

ENERGY SAVING HIGH PRODUCTION FRYING

- Solid state control standard
- Matchless ignition
- Self cleaning burner & down draft protection
- Stainless steel tank, front, door and sides
- Drain valve interlock safety switch
- 9″ legs

SSH Mixed Battery with optional 12-Button Computer, Digital and Solid State controls, basket lifts, filter drawer and casters

ENERGY STAR

10 YEAR FRY POT WARRANTY

OPTIONAL FEATURES

- Solstice Filter Drawer
- Oil filtration in a fryer battery
- Solstice SoloFilter-Oil filtration in a single fryer
- 9″ casters optional
- Fry Vat covers, optional
- Stainless Steel Back (SS) Per Unit
- Basket Lifts
- PFW-1 built-in foodwarmer, 750watt for BNB Solstice bread and batter dump station
- Multi-Zone computer control - not available on split tank fryers
- SSTC Back-up controller- can be added to any fryer that uses a digital or computerized control

SSH CONTROLLER OPTIONS:

All controller options include the patented self cleaning burner and downdraft protection system, matchless ignition and drain valve interlock switch.

Touchscreen Control

- On-screen brand logo
- Brightness adjustment
- Product key graphics
- USB port for data transfer
- Language support & recipe storage

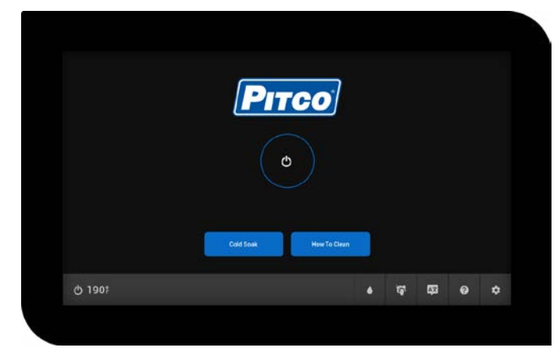

Multi-Zone Computer - All the features of the Computerized Control plus:

- Perfect for 3 basket configuration
- Simple two step process: Select product, then select zone
- Different color zone for each basket
- Eliminates confusion of which product started cooking first

12 Button Computerized Control standard with twelve count down timers with elastic "flex time" for more product consistency. Melt cycle, boil-out capability and drain valve interlock switch.

Digital Control standard with two count down timers, melt cycle, boil-out capability and drain valve interlock switch.

Solid State Thermostat standard with melt cycle, boil-out capability and drain valve interlock switch.

SOLSTICE SUPREME HIGH EFFICIENCY, HIGH PRODUCTION FRYERS

All SSH Gas Fryer Systems standard with rear "T" manifold and 9" legs. Casters available below. ENERGY STAR® Qualified Models are marked with an asterisk (*)

				CONTROLLER OPTIONS					
Model Number	Oil Capacity (Lbs.)	Cook Area (W x D)	BTUs	Solid State (SSTC)	Digital (D)	12 Button Computer (C)	OneTouch Control (OT)	Approx Ship Wt. (lbs.)	Approx Cubic Feet
SSH55*	40-50	14"x14"	80K	$21,362	$22,076	$25,624	$28,288	208	34.6
SSH55R	40-50	14"x14"	100K	$23,995	$24,709	$28,257	$30,921	208	34.6
SSH55T	20-25ea	7"x14"ea	40Kea	$25,485	$26,199	$29,747	$34,573	230	34.6
SSH55TR	20-25ea	7"x14"ea	50Kea	$28,118	$28,832	$32,380	$37,206	230	34.6
SSH75*	75	18"x18"	105K	$23,857	$24,571	$28,119	$30,783	275	34.6
SSH75R	75	18"x18"	125K	$26,490	$27,204	$30,753	$33,416	275	34.6
SSH60*	50-60	14"x18"	80K	$22,486	$23,200	$26,748	$29,412	226	34.6
SSH60R	50-60	14"x18"	100K	$25,119	$25,833	$29,381	$32,045	226	34.6
SSH60W*	50-60	18"x14"	100K	$22,915	$23,629	$27,177	$29,841	275	34.6
SSH60WR	50-60	18"x14"	125K	$25,548	$26,262	$29,810	$32,474	275	34.6

Note 1: To meet CSA specification, all gas fryers with basket lifts must be ordered with casters and installed with flexible gas connector with restraining device. Basket lifts add 4-1/2" to overall depth of fryer. Add 100 lbs to fryer weight. Not available with SSTC controller

SOLSTICE FILTER DRAWER

See Pages 22 & 23 for Solstice Filter Drawer, Portable Filter and Oil Reclamation Options

SOLSTICE BREAD AND BATTER - BNB DUMP STATION

Standard with 4-5/8" recessed pan and screen. Scooped pan liner available at no additional cost in lieu of screen. Additional BNB accessories on page 29

Model Number	List Price	Approx Ship Wt. (lbs.)	Approx Cubic Feet
SSHBNB55	$3,245	150	17
SSHBNB75	$3,305	150	23
PCF14 (Crisp'N Hold pg 24)	$17,689	210	17
PCF18 (Crisp'N Hold pg 24)	$18,174	217	23
SSH-BNB-55-BT Basket Tower - Baskets sold separately; 10 twin baskets required - see page 30	$6,586	150	18
SSH-BNB-75-BT Basket Tower - Baskets sold separately; 10 twin baskets required - see page 30	$6,869	-	-

CASTERS (1/2 set per cabinet, minimum 1 set)

# of Fryers	1	2	3	4	5	6
LIST PRICE	$889	$889	$1,334	$1,778	$2,223	$2,667

CE approvals for individual models may not be available with all options or in all areas. Consult the factory for more information.

SOLSTICE SUPREME HIGH EFFICIENCY GAS FRYERS

OPTIONS & ACCESSORIES

Description		List Price
Bulk Fresh Oil Piping Connection Kit (per battery)		$604
Stainless Steel Back (SS) Per Unit		$1,341
Basket Lifts (see note 1 above) *Only one needed for dual tank fryers		$6,041
PFW-1 Built-in Foodwarmer, 750watt for BNB Solstice Bread and Batter Dump Station		$2,110
Multi-Zone Computer control or Profile Computer control not available on split tank fryers		$4,254
Signal IQ		$1,015
Foam Zone Protector		$409
SSTC Back-up Controller (Full) can be added to any fryer that uses a Digital or 12 Button Control	Full Fryer Add On	$1,239
SSTC Back-up Controller (Split) - can be added to any fryer that uses a Digital or 12 Button Control	Split Fryer Add On	$1,848

SMART SOLSTICE OPTIONS

Description		List Price
Autofiltration (AF) - can be added to any fryer that uses 12 Button Control or OneTouch (MUST include Smart Pump & Drain) $ per pot		$8,529
Autotop off - can be added to any fryer that uses 12 Button Control or OneTouch (MUST include AF)		$4,123
SOS Smart Oil Sensor - can be added to any fryer that uses 12 Button Control or OneTouch		$6,219
Powered Waste and Fresh Oil Management (MUST include AF) Price per unit		$4,632
Smart Pump & Drain (MUST include AF)	for Solofilters	$5,004
Smart Pump & Drain (MUST include AF)	per add on vat	$2,768
See Solstice Supreme Prepackaged systems on Page 15		

SSH55T with optional digital control and casters

SOLSTICE FRYERS
ELECTRIC

COOK MORE PRODUCT, MORE EFFICIENTLY & PROVIDE AN IMPROVED OPERATING ENVIRONMENT

- Solid state control standard
- Universal control system mix and match controls to fit your needs
- Mix and match cabinets: any Solstice Electric models can be combined to create the perfect combination for your individual needs
- Mercury free relays - reliable and safe for the environment
- Front serviceable - all components are accessible from the front to make service and maintenance faster and easier
- The heating element can be removed without access to the back of the fryer
- 1-1/4" full port drain valve - clog free draining
- Safe fixed element design - designed to eliminate oil migration through pivot components

SE14 shown with optional digital control and casters

CONTROLLER OPTIONS

Touchscreen Control
- On-screen brand logo
- Brightness adjustment
- Product key graphics
- USB port for data transfer
- Language support & recipe storage

Multi-Zone Computer - All the features of the Computerized Control plus:
- Perfect for 3 basket configuration
- Simple two step process: Select product, then select zone
- Different color zone for each basket
- Eliminates confusion of which product started cooking first

12 Button Computerized Control standard with twelve count down timers with elastic "flex time" for more product consistency. Melt cycle, boil-out capability and drain valve interlock switch.

Digital Control standard with two count down timers, melt cycle, boil-out capability and drain valve interlock switch.

Solid State Thermostat standard with melt cycle, boil-out capability and drain valve interlock switch.

ENERGY STAR

SOLSTICE ELECTRIC FRYERS

SOLSTICE ELECTRIC FRYERS

For Use In A System Or Stand Alone | ENERGY STAR® Qualified Models are marked with an asterisk (*)

					CONTROLLER OPTIONS					
	Model Number	Oil Capacity (Lbs.)	Power kW	Cook Area (W x D)	Solid State (SSTC)	Digital (D)	12 Button Computer (C)	OneTouch Control (OT)	Approx Ship Wt. (lbs.)	Approx Cubic Feet
CE	SE14X*	40-50	14	14"x14"	$16,842	$17,556	$21,104	$23,768	200	17.8
CE	**SE14***	40-50	17	14"x14"	$19,673	$20,387	$23,935	$26,599	200	17.8
CE	SE14R*	40-50	22	14"x14"	$22,306	$23,020	$26,568	$29,232	200	17.8
CE	SE14T	20-25ea	8.5ea	7"x14"ea	$24,578	$25,292	$28,840	$33,666	230	17.8
CE	**SE18*** **	70-90	17	18"x18"	$24,178	$24,892	$28,440	$31,104	226	34.6
CE	SE18R	70-90	22	18"x18"	$26,811	$27,525	$31,073	$33,737	226	34.6
CE	SE184*	60	17	18"x14"	$22,582	$23,296	$26,844	$29,508	226	34.6
CE	SE184R	60	22	18"x14"	$25,216	$25,930	$29,478	$32,142	226	34.6

Note 1: Add 100 lbs to fryer weight. Basket lifts add 4-1/2" to overall depth of fryer. Basket lifts are wired at the factory for fryer voltage on 208v, 240v models. All 440-480v models require an additional 115v supply to power the basket lifts and filter systems

SOLSTICE FILTER DRAWER

CE approvals for individual models may not be available with all options or in all areas. Consult the factory for more information.

See Pages 22 & 23 for Solstice Filter Drawer, Portable Filter and Oil Reclamation Options

SOLSTICE BREAD AND BATTER - BNB DUMP STATION

Standard with 4-5/8" recessed pan and screen. Scooped pan liner available at no additional cost in lieu of screen

Model Number	List Price	Approx Ship Wt. (lbs.)	Approx Cubic Feet
SEBNB14	$3,245	150	17
SEBNB18	$3,305	150	23
PCF14 (Crisp'N Hold 24)	$17,689	210	17
PCF18 (Crisp'N Hold pg 24)	$18,174	217	23
SEBNB55-BT Basket Tower - Baskets sold separately. 10 twin baskets required - see page 30	$6,586	150	18

CASTERS (1/2 set per cabinet, minimum 1 set)

# of Fryers	1	2	$3	4	5	6
List Price	$889	$889	$1,334	$1,778	$2,223	$2,667

OPTIONS & ACCESSORIES

Description		List Price
Stainless Steel Back (SS) Per Unit		$1,341
Basket Lifts *Only one needed for dual tank fryers		$6,041
PFW-1 Built-in Foodwarmer, 750watt for BNB Solstice Bread and Batter Dump Station		$2,110
Multi-Zone Computer control or Profile Computer control not available on split tank fryers		$4,254
SSTC Back-up Controller- can be added to any fryer that uses a Digital or 12 Button Control	Full Fryer Add Split Fryer Add	$1,239 $1,848
480VAC		$1,733
Power Cord and Plug - 6 foot, 4 Gauge power cord, with NEMA 15-60P plug Option available for Domestic SE models, 14KW and 17KW, 3 phase, 208V or 240V fryers only		$859
Foam Zone Protector		$409

SMART SOLSTICE OPTIONS

Description		List Price
Autofiltration (AF) - can be added to any fryer that uses 12 Button Control or OneTouch (MUST include Smart Pump & Drain) $ per pot		$8,529
Autotop off - can be added to any fryer that uses 12 Button Control or OneTouch (MUST include AF)		$4,123
SOS Smart Oil Sensor - can be added to any fryer that uses 12 Button Control or OneTouch		$6,219
Powered Waste and Fresh Oil Management. (MUST include AF) Price per unit		$4,632
Smart Pump & Drain (MUST include AF)	for Solofilters per add on vat	$5,004 $2,768

See Prepackaged Electric Fryer Systems on Page 16

OPEN KITCHEN

** Model available with Open Kitchen Technology

FILTER-READY SOLSTICE GAS FRYERS

GAS

HIGH PRODUCTION, 57% THERMAL EFFICIENT

Automatic Self Cleaning Burners Standard (Patented)
With the push of a button, our matchless ignition system ignites the pilot. This begins a 30 second automatic self cleaning burner procedure, which ensures optimal burner efficiency. This procedure ensures that the burners stay clean and efficient all day, every day... PERIOD!
(not available with millivolt control)

Matchless Ignition* Ignites the pilot once a each day when the power is turned on.

Universal Control System* Mix and match controls to fit your needs. 12 Button Computer Control, Digital Control, Solid State, or use the Solid State control as a back-up to the Computer or Digital.

Front Serviceable - All components are accessible from the front to make service and maintenance faster and easier.
*Only available with upgraded controls.
Millivolt thermostat standard on Solstice Gas Fryers

SG14R-2FD shown with optional filter drawer & casters

10 YEAR FRY POT WARRANTY

CONTROLLER OPTIONS

12 Button Computerized Control standard with twelve count down timers with elastic "flex time" for more product consistency. Melt cycle, boil-out capability and drain valve interlock switch.

Digital Control standard with two count down timers, melt cycle, and drain valve interlock switch.

Solid State Thermostat standard with melt cycle, boil-out capability and drain valve interlock switch.

Millivolt Thermostat standing pilot control with mechanical thermostat. Standard on all Solstice gas fryers.

SOLSTICE BURNER DESIGN

The solstice burner draws more primary air for improved air gas mixture. The baffle design causes a scrubbing action of the flame, squeezing more heat out. This design causes the baffle to get into radiant mode quicker for improved temperature recovery and faster cooking.

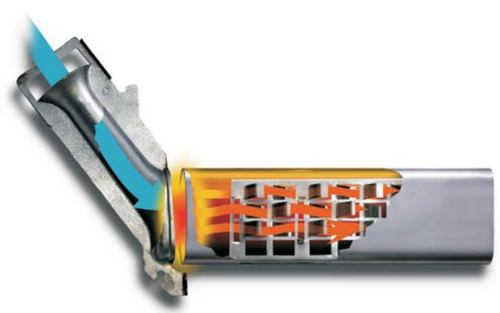

SOLSTICE GAS FRYERS

Built in filter drawer filtration for use in multi-fryer systems or a standalone fryer | All Solstice Gas Systems standard with rear "T" gas manifold and 9" legs.
For prepackaged systems see page 29

Model Number	Oil Capacity (Lbs.)	BTUs	Cook Area (W x D)	Millivolt	SSTC	Digital (D)	12 Button Computer (C)	Approx Ship Wt. (lbs.)	Approx Cubic Feet
SG14RS	40-50	122K	14"x14"	$19,581	$22,026	$22,823	$26,379	208	17

Note 1: Basket Lifts not available with Millivolt or SSTC controller. To meet CSA requirements, all fryers with basket lifts must be ordered with casters and installed with a FLEXIBLE GAS CONNECTOR with restraining device. Add 100 lbs to fryer weight. Basket lifts add 4-1/2" to overall depth of fryer

SOLSTICE FILTER DRAWER

See Pages 22 & 23 for Solstice Filter Drawer, Portable Filter and Oil Reclamation Options

SOLSTICE BREAD AND BATTER - BNB DUMP STATION

Standard with 4-5/8" recessed pan and screen. Scooped pan liner available at no additional cost in lieu of screen
Additional BNB accessories on page 29

Model Number	List Price	Approx Ship Wt. (lbs.)	Approx Cubic Feet
SGBNB14	$3,245	150	17
SGBNB18	$3,305	150	23
PCF14 (Crisp'N Hold pg 24)	$17,689	210	17
PCF18 (Crisp'N Hold pg 24)	$18,174	217	23

CASTERS (1/2 set per cabinet, minimum 1 set)

# of Fryers	1	2	3	4	5	6
List Price	$889	$889	$1,334	$1,778	$2,223	$2,667

OPTIONS & ACCESSORIES

Description	List Price
Bulk Fresh Oil Piping Connection Kit (per battery)	$604
Stainless Steel Back (SS) Per Unit	$1,341
PFW-1 Built-in Foodwarmer, 750watt for BNB Solstice Bread and Batter Dump Station	$2,110
Multi-Zone Computer control or Profile Computer control	$4,688
Backup T-Stat-Full Tank	$1,239
See Prepackaged Gas Fryer Systems on Page 17	

OPEN KITCHEN by SiteSage

*** Some models available with Open Kitchen Technology**

CE approvals for individual models may not be available with all options or in all areas. Consult the factory for more information.

SOLSTICE SUPREME - PACKAGED SYSTEMS

SSH FRYING SYSTEMS WITH FILTER - Select From These Fryer Systems Or Build Your Own On Page 9

Number of Fryers	Model SSH55*	Model SSH55R	Model SSH60*	Model SSH60W	Model SSH75*	Suffix SS Stainless Back	Back-up T-stat	Basket Lifts (See Note 1)
Solid State Thermostat - standard with melt cycle, boil-out capability, and drain valve interlock switch								
1	$46,608	$49,242	$47,732	$48,162	$49,103	$1,341	N/A	N/A
2	$70,367	$75,634	$72,616	$73,475	$75,358	$2,682	N/A	N/A
3	$94,127	$102,027	$97,500	$98,788	$101,612	$4,023	N/A	N/A
4	$117,887	$128,420	$122,384	$124,102	$127,868	$5,364	N/A	N/A
Digital Control - standard with two count down timers, melt cycle, boil-out capability, and drain valve interlock switch								
1	$47,322	$49,955	$48,446	$48,876	$49,817	$1,341	$1,239	$6,536
2	$71,795	$77,062	$74,044	$74,903	$76,786	$2,682	$2,478	$13,072
3	$96,269	$104,169	$99,642	$100,930	$103,754	$4,023	$3,718	$19,609
4	$120,743	$131,276	$125,240	$126,958	$130,723	$5,364	$4,957	$26,145
12 Button Computerized Control - standard with twelve count down timers with elastic "flex time" for more product consistency. Melt cycle, boil-out capability, and drain valve interlock switch								
1	$50,871	$53,504	$51,995	$52,424	$53,365	$1,341	$1,239	$6,536
2	$78,892	$84,158	$81,141	$81,999	$83,882	$2,682	$2,478	$13,072
3	$106,914	$114,813	$110,287	$111,575	$114,399	$4,023	$3,718	$19,609
4	$134,936	$145,469	$139,433	$141,151	$144,916	$5,364	$4,957	$26,145
OneTouch Control - 10.1" display								
1	$53,534	$56,167	$54,658	$55,088	$56,029	$1,341	N/A	$6,536
2	$84,219	$89,485	$86,468	$87,327	$89,210	$2,682	N/A	$13,072
3	$114,905	$122,805	$118,278	$119,566	$122,390	$4,023	N/A	$19,609
4	$145,591	$156,124	$150,088	$151,806	$155,571	$5,364	N/A	$26,145

Note 1: To meet AGA/CGA/CSA specification, all gas fryers with basket lifts must be ordered with casters and installed with flexible gas connector with restraining device. Basket lifts add 4-1/2" to overall depth of fryer. Add 100 lbs to fryer weight. Not available with SSTC controller

CASTERS (1/2 set per cabinet, minimum 1 set)

# of Fryers	1	2	3	4	5	6
Price	$889	$889	$1,334	$1,778	$2,223	$2,667

SOLSTICE BREAD & BATTER - BNB DUMP STATION

Standard with 4-5/8" recessed pan and screen. Scooped pan liner available at no additional cost in lieu of screen

		Stainless Steel Back (SS) Add On	Approx Ship Wt. (lbs.)	Approx Cubic Feet
BNB-SSH55	$3,245	$1,341	150	17
BNB-SSH75	$3,305	$1,341	150	23
PCF14 (Crisp'N Hold pg 24)	$17,689	$1,341	210	17
PCF18 (Crisp'N Hold pg 24)	$18,174	$1,341	217	23

If BNB or PCF is added between two fryers, an additional $ 1,284 piping charge will apply

Flush Hose - to assist in rinsing the tank during oil filtration	$1,169
Filter Heater - for use with solid shortening (charged once per filter PLUS an additional charge of $1186 per vat)	$1,252
Filter Heater - for use with liquid shortening (one-time charge)	$1,252
PFW-1 Built-in Foodwarmer, 750watt	$2,110
Paperless Filter Option	$1,012

OPTIONS & ACCESSORIES

Autofiltration (AF) - can be added to any fryer that uses 12 Button Control or OneTouch (MUST include Smart Pump & Drain) $ per pot	$8,529
SOS Smart Oil Sensor - can be added to any fryer that uses 12 Button Control or OneTouch	$8,040
Basket Lifts *Only one needed for dual tank fryers	$6,041
Oil Handling - Waste oil piping option (for liquid shortening)	$2,398
Oil Handling - Solid shortening upgrade (for solid shortening)	$3,650
Fresh Bulk Oil Connection	$604

APPROXIMATE SHIPPING WEIGHT CHART (LBS) (With Filter)

Fryers	1	2	3	4	5	6
SSH55/55R	350	550	785	980	1195	1410
SSH60/60W/75	380	602	843	1084	1325	1566

*For BNB dump station, add 150 lbs to above weight
*For basket lifts, add 100 lbs per fryer to above weight

SOLSTICE ELECTRIC - PACKAGED SYSTEMS

SOLSTICE ELECTRIC FRYER SYSTEMS WITH FILTER - ELECTRIC

Select From These Fryer Systems Or Build Your Own On Page 12. All Solstice Electric Fryer Systems standard with 9" legs. Casters available below

Number of Fryers	Model SE14X* (14kW)	Model SE14S (17kW)	Model SE14RS* (22kW)	Model SE18S (17kW)	Model SE18RS (22kW)	Suffix SS Stainless Back	Back-up T-stat	Basket Lifts (See Note 1)
Solid State Thermostat - standard with melt cycle, boil-out capability, and drain valve interlock switch								
1	$42,089	$44,920	$47,553	$49,425	$52,058	$1,341	N/A	N/A
2	$61,329	$66,991	$72,257	$76,000	$81,267	$2,682	N/A	N/A
3	$80,568	$89,062	$96,963	$102,576	$110,477	$4,023	N/A	N/A
4	$99,808	$111,133	$121,667	$129,152	$139,686	$5,364	N/A	N/A
Digital Control - standard with two count down timers, melt cycle, boil-out capability, and drain valve interlock switch								
1	$42,803	$45,633	$48,267	$50,138	$52,772	$1,341	$1,239	$6,536
2	$62,757	$68,419	$73,685	$77,428	$82,695	$2,682	$2,478	$13,072
3	$82,710	$91,204	$99,104	$104,718	$112,618	$4,023	$3,718	$19,609
4	$102,664	$113,989	$124,523	$132,008	$142,542	$5,364	$4,957	$26,145
12 Button Computerized Control - standard with twelve count down timers with elastic "flex time" for more product consistency. Melt cycle, boil-out capability, and drain valve interlock switch								
1	$46,351	$49,182	$51,815	$53,687	$56,320	$1,341	$1,239	$6,536
2	$69,853	$75,515	$80,781	$84,524	$89,792	$2,682	$2,478	$13,072
3	$93,354	$101,848	$109,749	$115,362	$123,263	$4,023	$3,718	$19,609
4	$116,857	$128,182	$138,716	$146,201	$156,735	$5,364	$4,957	$26,145
OneTouch Control - 10.1" display								
1	$49,014	$51,845	$54,479	$56,350	$58,984	$1,341	N/A	$6,536
2	$75,181	$80,842	$86,109	$89,851	$95,119	$2,682	N/A	$13,072
3	$101,346	$109,840	$117,740	$123,354	$131,254	$4,023	N/A	$19,609
4	$127,512	$138,837	$149,371	$156,856	$167,390	$5,364	N/A	$26,145

Note 1: Basket Lifts not available with SSTC controller. Add 100 lbs to fryer weight. Basket lifts add 4-1/2" to overall depth of fryer. Basket lifts are wired at the factory for fryer voltage on 208v, 240v models. All 440-480v models require an additional 115v supply to power the basket lifts

CASTERS (1/2 set per cabinet, minimum 1 set)

Number of Fryers	1	2	3	4	5	6
Price	$889	$889	$1,334	$1,778	$2,223	$2,667

SOLSTICE BREAD & BATTER - BNB DUMP STATION

Standard with 4-5/8" recessed pan and screen. Scooped pan liner available at no additional cost in lieu of screen

		Stainless Steel Back (SS) Add $	Approx Ship Wt. (lbs.)	Approx Cubic Feet
BNB-SE14	$3,245	$1,341	150	17
BNB-SE18	$3,306	$1,341	150	23
PCF-14 (Crisp'N Hold pg 24)	$17,689	$1,341	210	17
PCF-18 (Crisp'N Hold pg 24)	$18,174	$1,341	217	23

If BNB or PCF is added between two fryers, an additional piping charge will apply

Flush Hose - to assist in rinsing the tank during oil filtration	$1,169
Filter Heater - for use with solid shortening	$1,252
PFW-1 Built-in Foodwarmer, 750watt	$2,110
Paperless Filter Option	$1,012
480 VAC	$1,733 per fryer
Power Cord and Plug-6 foot, 4 gauge power cord with NEMA 15-60P Plug, Option available for Domestic SE models, 14KW and 17KW 3 phase, 208V or 240V fryers only	$859
Oil Handling - Waste oil piping option (for liquid shortening)	$2,398
Oil Handling - Solid shortening upgrade (for solid shortening)	$3,650
Fresh Bulk Oil Connection	$604

APPROXIMATE SHIPPING WEIGHT CHART (LBS) (With Filter)

Fryers	1	2	3	4	5	6
SE14X/SE14/SE14R	350	550	785	980	1195	1410
SE18S/SE18R	380	602	843	1084	1325	1566

*For BNB dump station, add 150 lbs to above weight
*For basket lifts, add 100 lbs per fryer to above weight.
*For systems with SE14TS, SE14TRS Twin Tank fryers or mix and matchconfigurations, please contact your Pitco representative or call the factory for pricing assistance

SOLSTICE GAS - PACKAGED SYSTEMS

SOLSTICE GAS SYSTEMS WITH FILTER - GAS

Select From These Systems Or Build Your Own On Page 14
All Solstice Gas Fryer Systems standard with rear "T" manifold and 9" legs. Casters available below

Number of Fryers	Model SG14RS	Suffix SS Stainless Back	Back-up T-stat	Basket Lifts (See Note 1)
Millivolt Thermostat				
1	$45,198	$1,341	N/A	N/A
2	$67,551	$2,682	N/A	N/A
3	$89,903	$4,023	N/A	N/A
4	$112,252	$5,364	N/A	N/A
Solid State Thermostat - standard with melt cycle, boil-out capability, matchless ignition and drain valve interlock switch				
1	$47,272	$1,341	N/A	N/A
2	$71,699	$2,682	N/A	N/A
3	$96,126	$4,023	N/A	N/A
4	$120,549	$5,364	N/A	N/A
Digital Control - standard with two count down timers, melt cycle, boil-out capability, matchless ignition and drain valve interlock switch				
1	$48,067	$1,341	$1,239	$6,536
2	$73,290	$2,682	$2,478	$13,072
3	$98,511	$4,023	$3,718	$19,609
4	$123,730	$5,364	$4,957	$26,145
12 Button Computerized Control - standard with twelve count down timers with elastic "flex time" for more product consistency. Melt cycle, boil-out capability, and drain valve interlock switch				
1	$51,623	$1,341	$1,239	$6,536
2	$80,402	$2,682	$2,478	$13,072
3	$109,180	$4,023	$3,718	$19,609
4	$137,954	$5,364	$4,957	$26,145

Note 1: To meet CSA specification, all gas fryers with basket lifts must be ordered with casters and installed with flexible gas connector with restraining device. Basket lifts add 3-7/8" to overall depth of fryer. Not available with Millivolt or Solid State

CASTERS (1/2 set per cabinet, minimum 1 set)

Number of Fryers	1	2	3	4	5	6
Price	$889	$889	$1,334	$1,778	$2,223	$2,667

SOLSTICE BREAD & BATTER - BNB DUMP STATION

Standard with 4-5/8" recessed pan and screen. Scooped pan liner available at no additional cost in lieu of screen. Additional BNB accessories on page 29

		Stainless Steel Back (SS) Add $	Approx Ship Wt. (lbs.)	Approx Cubic Feet
SGBNB14	$3,245	$1,341	150	17
SGBNB18	$3,306	$1,341	150	23
PCF14 (Crisp'N Hold pg 24)	$17,689	$1,341	210	17
PCF18 (Crisp'N Hold pg 24)	$18,174	$1,341	217	23

If BNB or PCF is added between two fryers, an additional $ 2,340 piping charge will apply

Flush Hose - to assist in rinsing the tank during oil filtration	$1,169
Filter Heater - solid shortening (per filter X1 PLUS additional $1186 per vat)	$1,252
Filter Heater - for use with liquid shortening	$1,252
PFW-1 Built-in Foodwarmer, 750watt	$2,110
Paperless Filter Option	$1,012

APPROXIMATE SHIPPING WEIGHT CHART (LBS)

Fryers	1	2	3	4	5	6
SG14	350	550	785	980	1195	1410

*For BNB dump station, add 150 lbs to above weight | *For basket lifts, add 100 lbs per fryer to above weight

SG14R-2 shown with optional filter drawer & casters

Bulk Waste Oil Handling Options	List Price
Waste oil piping option (for liquid shortening)	$2,398
Solid shortening upgrade (for solid shortening)	$3,650

Baskets

Twin, Triple, or Full Options Available

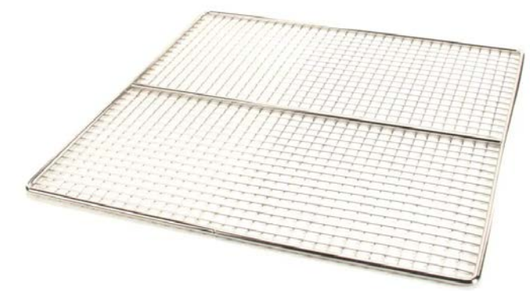

Tank Screen

Tank Cover

Splash Guard

Covers & Guards

For Fryers and Pasta Cookers

Racks and Mesh Screens For Gas and Electric Fryers

Check out some other product specific accessories on the designated product pages

PITCO®

DON'T FORGET ACCESSORIES

See pages 28-31 for all available accessories

STANDARD FRYERS

GAS AND ELECTRIC

ENERGY STAR® QUALIFIED MODELS
Model E35 - Electric Floor Fryer

- Stainless steel tank, front, door and sides
- Sealed construction heating elements with high temperature alloy stainless steel sheath
- 40% less gas with same production rate as a 65C+S
- 35lb Oil Capacity
- Runs on 15kW power

Model VF65

- 65lb Oil Capacity
- 95,000 BTU

Model VF35-ES

- 35lb Oil Capacity
- 70,000 BTU

ECONOMY - GAS

(Standalone fryers not available with filtration). See page 23 for portable filtration systems

Model Number	Oil Capacity (Lbs.)	BTUS	Cook Area W x D	Suffix S Stainless Steel Tank/Front/Door	Approx Ship Wt. (lbs.)	Approx Cubic Feet
35C+	35-40	90,000	14" x 14"	$5,759	161	17
40D	40-45	107,000	14" x 14"	$8,640	181	17
45C+S	42-50	122,000	14" x 14"	$7,090	181	17
65C+	65-80	150,000	18" x 18"	$8,906	226	23

Casters, covers and other accessories available on pages 26.

STANDARD SOLSTICE - GAS

Stand alone only. Millivolt control only. Not available with Filter Drawer filtration system or in a battery

Model Number	Oil Capacity (Lbs.)	BTUS	Cook Area W x D	Suffix S Stainless Steel Tank/Front/Door	Approx Ship Wt. (lbs.)	Approx Cubic Feet
SG14	40-50	110,000	14"x 14"	$14,659	200	17
SG14R	40-50	122,000	14"x 14"	$18,461	208	17
SG14T	20-25 each	50000 each	14"x 14"	$20,734	200	17
SG18	70-90	140,000	18"x 18"	$19,661	226	23

Casters, covers and other accessories available on page 30

ENERGY STAR FRYER - GAS

Free Standing, stand alone fryer | Millivolt control only | Energy Star Qualified Models are marked with Asterisk*

Model Number	Oil Capacity (Lbs.)	BTUS	Cook Area W x D	Suffix S Stainless Steel Tank/ Front/Door	Approx Ship Wt. (lbs.)	Approx Cubic Feet
*VF35-ES	35	70,000	14"x 13-5/8"	$6,383	161	17
VF65	65	95,000	18"x17 11/32"	$9,561	180	23

ENERGY STAR FRYER - ELECTRIC

Model Number	Oil Capacity (Lbs.)	Power (kW)	Cook Area W x D	Stainless Steel Tank	Approx Ship Wt. (lbs.)	Approx Cubic Feet	Cutout Dimensions
*E35	35	15	14"x 14"	$8,651	200	17	15"x 32-1/8"

COUNTERTOP FRYER - GAS

Models not available with Filter Drawer filtration | See page 22 for portable filter systems | Energy Star Qualified Models are marked with Asterisk*

Model Number	Oil Capacity (Lbs.)	BTUs	Cook Area W x D	Stainless Steel Tank	Approx Ship Wt. (lbs.)	Approx Cubic Feet
SGC	35	70,000	14"x 13-5/8"	$15,579	150	17

A 70,000 BTU counter top version of our popular Solstice fryer. With a 13" wide cook surface, this fryer uses standard fry baskets. The unit can be flush mounted, or on 4" flange legs that are included

*Energy Star Model

CE approvals for individual models may not be available with all options or in all areas. Consult the factory for more information.

MEGAFRY FRYERS

GAS

HIGH EFFICIENCY & HIGH PRODUCTION

145.6 lbs/hour
36% more than SSH75R!

SGM24 with 12 Button Computer & optional casters and 1 large/2 small basket configuration

FEATURES

- High Efficiency & High Production
- Upgrade controls available
- Optional filtration system
- Standard with stainless steel tank, front, sides and splashback
- Standard with solid state control
- Standard with Large Baskets (A4514702)

Submerger Option

Basket Options

Option 1
4 "small" A4514701 baskets

Option 2
2 "small" A4514701 baskets, 1 "large" A4514702 basket

Option 3
2 "large" A4514702 baskets

MEGAFRY - GAS

				CONTROLLER OPTIONS					
Model Number	Oil Capacity (Lbs.)	BTUs	Cook Area W x D	Solid State (SSTC)	Digital (D)	12 Button Computer (C)	OneTouch	Approx Ship Wt. (lbs.)	Approx Cubic Feet
SGM24	140-150	165,000	24"x24"	$35,354	$36,068	$39,616	$42,279	375	56

MEGAFRY-BASKET OPTIONS - QUANTITY REQUIRED

	SGM24		
Small A4514701	4	2	-
Large A4514702	-	1	2

FILTER DRAWER FILTRATION SYSTEM FOR MEGAFRY OR FLAT BOTTOM FRYER

# of Fryers in System	1	2	3	4
FD-MEGA	$27,143	$28,997	$29,453	$34,029

CASTERS FOR MEGAFRY OR FLAT BOTTOM FRYER

Number of Fryers	1	2	3	4	5	6
MEGAFRY	$889	$889	$1,334	$1,778	$2,223	$2,667

OPTIONS & ACCESSORIES

Description	List Price
Submerger Option	$602

CE approvals for individual models may not be available with all options or in all areas. Consult the factory for more information.

FLAT BOTTOM FRYER

GAS

- Perfect for free float frying, no tubes
- 24" x 24" and 18" x 24" sizes
- Standard mild steel tank
- Matchless Ignition
- Standard stainless steel front, sides and splashback
- No combustion blower
- Optional filter system

FLAT BOTTOM FRYER - GAS

Model Number	Oil Capacity (Lbs.)	BTUs	Cook Area W x D	Solid State (SSTC)	Digital (D)	Approx Ship Wt. (lbs.)	Approx Cubic Feet
FBG18	42-65	100,000	18"x 24"	$31,088	$31,802	355	39
FBG24	57-87	120,000	24"x 24"	$33,524	$34,238	423	47

FILTER DRAWER FILTRATION SYSTEM FOR FLAT BOTTOM FRYERS

Number of fryers in system	1	2	3	4
FD-Flat Bottom	$27,143	$28,997	$31,515	$34,029

CASTERS FOR FLAT BOTTOM FRYERS

Number of fryers	1	2	3	4	5	6
Flat Bottom	$889	$1,334	$1,778	$2,222	$2,667	$3,111

OPTIONS & ACCESSORIES

Description	List Price
Tank Divider FBG	$429
Crumb Tray FBG	$190

FBG24X24, FB24X24,
FD-FLAT BOTTOM WITH OPTIONAL CASTERS

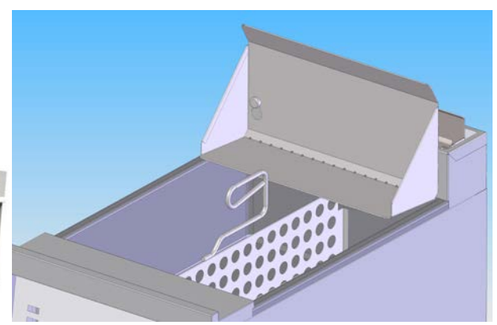

TANK DIVIDER OPTION AND
CRUMB TRAY ACCESSORY

OIL HANDLING

OIL FILTRATION AND RECLAMATION SYSTEMS

P14

FAT VAT

FAT VAT

Description	List Price
Convenient, safe oil transport system holds 40 pounds (5.3 gallons)	$2,515

PORTABLE FILTRATION

Filter requires separate power connection. For use with gas or electric fryers

Filter Model Number	Oil Capacity (Lbs.)	Filter mounted on 2" casters For use with:	List Price	Filter Heater (add-on)	Paperless Filter (add-on)	Approx Ship Wt. (lbs.)
P14	55	All 14 size fryers	$10,758	$1,252	$1,012	131
P18	75	All 18 size fryers	$12,693	$1,252	$1,012	156
RP14	55	All 14 size fryers (Reversible Pump)	$11,564	$1,252	$1,012	131
RP18	75	All 18 size fryers (Reversible Pump)	$13,558	$1,252	$1,012	156

OIL RECLAMATION

With Pitco's internal oil reclamation system, a third party oil company can install their holding system and connect it directly to a Pitco fryer system. This means an operator has no spilling and no burning hazards when it comes to the disposal of used oil. Pitco's filter pump will deliver used oil to a third party holding tank. Just another way Pitco is saving its customers money. Tie into a third party remote oil system with waste oil piping option, for use with Solstice Filter.

Description	List Price
Waste oil piping option (for liquid shortening)	$2,398
Solid shortening upgrade (for solid shortening)	$3,650
Fresh Bulk Oil Connection	$604

CE approvals for individual models may not be available with all options or in all areas. Consult the factory for more information.

SOLSTICE FILTER DRAWER

SMART, SIMPLE AND EASY TO USE

With a 3" drain line, 8 gallon per minute oil pump, & simple two step filter process, what could be easier?

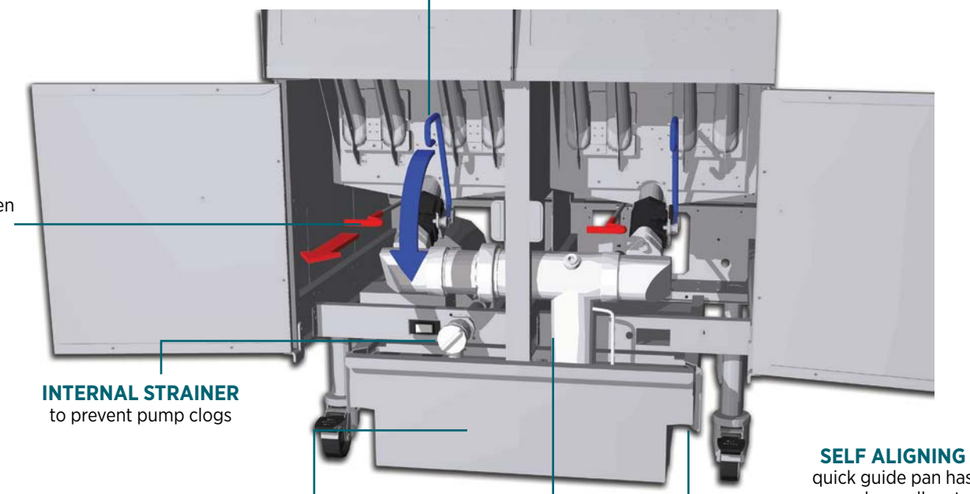

STEP #1
Pull the blue handle to drain the fryer

STEP #2
Pull the red handle to open the oil return valve and activate the pump in one easy step

INTERNAL STRAINER
to prevent pump clogs

FEWER FILTER PARTS
(only 4 including the pan)

CLOG FREE
Extra Large 3" drain manifold and spout provide fast draining for faster turn around times

SELF ALIGNING
quick guide pan has no rack or rollers to worry about

The Solstice Filter System is available on two or more fryers, or the Solstice SoloFilter can be paired with a single gas or electric fryer.

SOLSTICE FILTER DRAWER OIL FILTRATION SYSTEM

Number of Full and/or Twin Tanks in System - Note: Twin Tank = 2 Tanks
Solstice filter requires separate power connection on all gas fryers and electric fryers of 400 or 440 volt

FD-Solstice	SoloFilter	2	3	4	5	6	Approx Ship Wt. (lbs.)
	$25,246	$27,643	$30,042	$32,440	$34,839	$37,237	150

Filter Drawer Guidelines:
1. All filters for gas fryers are available in 115vac -60hz. All single phase. For other voltages, please contact factory
2. All filters for electric fryers are wired at the factory for the fryer voltage on models from 208-240v. All 440-480v units require an additional 115v supply to power the filter system
3. Tie into a remote oil system with waste oil piping option, for use with Solstice Filter Drawer in a battery of two or more fryers see above for more details

OPTIONS & ACCESSORIES

Description	List Price
Flush Hose - to assist in rinsing the tank during oil filtration	$1,169
Filter Heater - for use with solid shortening	$1,252
Special Piping Charges For All Filter Systems - Piping charge for fryer to add to existing Solstice Battery Filter Drawer or SoloFilter, and piping through a BNB Dump Station	$2,398
Paperless Filter Option	$1,012

HOLDING & MERCHANDISING

ELECTRIC

DON'T HOLD YOUR FOOD, CRISP IT!

- Gentle hot air circulation draws air across and through food product for optimal temperature and texture to maintain warmth and crispness
- Heating elements and components located away from oils and vapors
- Large landing zone and adjustable and removable dividers for flexible product holding and easy cleaning
- All stainless steel construction with removable product tray and grease filters for easy cleaning
- Floor models can be used in a Solstice Fryer battery to keep food products crispy, hot, and ready to serve
- Large product landing zone

PCC/PCF PERFORMANCE

Food comes out of the fryer at 200° to 210°F. Active air circulation through the food, cools product to holding temperature quickly to reduce moisture loss and stop the cooking process. Excess moisture and oils are wicked away from the product and it remains crispy for an extended time.

HEAT LAMP PERFORMANCE

Food comes out of the fryer at 200° to 210°F. Under the heat lamp, heat is released slowly from the product as it continues to cook for as long as 45 minutes. Moisture and oil seep out and collect on the food. The result is overcooked and mushy product after 10-15 minutes.

PCC14

PCF18

CRISP N'HOLD CRISPY FOOD STATION - ELECTRIC

	Model Number	Sections	Capacity (Volume) cubic Inches	List Price	Approx Ship Wt.(lbs.)
	COUNTER MODELS				
CE	PCC14	2	837	$14,453	60
CE	PCC18	3	1050	$14,876	70
CE	PCC28	4	1780	$19,009	98
	FLOOR MODELS				
CE	PCF14/PCFLV14	2	837/625	$17,689	155
CE	PCF18/PCFLV18	3	1050/821	$18,174	165

* Countertop models (PCC) can not be used on existing BNB units

SOLSTICE BREAD AND BATTER - BNB DUMP STATION

	Model Number	List Price	Approx Ship Wt. (lbs.)	Approx Cubic Feet
CE	BNB (SSH55, SE14, SG14) SELV14, SSHLV14	$3,245	150	17
CE	BNB (SSH75, SE18, SG18)	$3,305	150	23

OPTIONS & ACCESSORIES

Description	List Price
Stainless Steel Back (SS) Per Unit	$1,341
PFW-1 Built in Foodwarmer, 750watt for BNB Bread and Batter Dump Station	$2,110
Basket Tower (SELV14, SSHLV14, SSH55, SE14, SG14R)	$6,586
Basket Tower (SELV184, SSHLV184,SSH75,SE18)	$6,869

CE approvals for individual models may not be available with all options or in all areas. Consult the factory for more information.

DISCOVER HOW A **RETHERMALIZER** ADDS VERSATILITY & MORE

Solstice SUPREME

SOLSTICE BURNER DESIGN

The solstice burner draws more primary air for improved air gas mixture. The baffle design causes a scrubbing action of the flame, squeezing more heat out. This design causes the baffle to get into radiant mode quicker for improved temperature recovery and faster cooking.

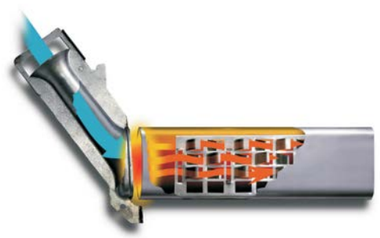

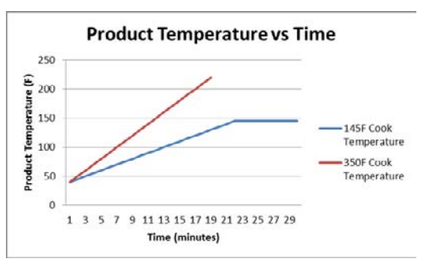

BLOG

Check out our blog for more details on how a rethermalizer can change both your menu and your kitchen operations at **www.pitco.com/blog**

Add Menu Versatility

Experience the benefits of re-heating high quality food products previously prepared and frozen in bulk. Reduce kitchen labor and training as well as store-site equipment requirements. Pitco Solstice Rethermalizers with marine grade stainless steel hold foods at a precise set temperature.

Basket Options
Rethermalizers have many options including racks, suitcases and baskets. Racks and suitcases come in 8 or 12 product capacities.

Sous Vide = cooking under vacuum
Water Retherm = reheating under vacuum

MORE **BENEFITS** OF RETHERM

REDUCES FOOD WASTE & INCREASES FOOD SAFETY

FOOD REMAINS AT SAFE SERVING TEMPS ALL DAY

HOLDS FOOD AT EXACT SERVING TEMPERATURE

MINIMIZED KITCHEN LABOR AND TRAINING

SOLSTICE RETHERMALIZER

GAS & ELECTRIC

- Solstice combustion system for **improved gas efficiency**
- Reduces kitchen labor and training
- Improves kitchen safety
- Gas Self Cleaning Burner system and down draft protection (patented)
- Convenience over range top application
- Exceptional product quality
- Reduces energy usage

CRTE Counter Top Electric Rethermalizer

WATER RETHERMALIZER - GAS

Model Number	BTUs	Water Capacity (Gallons)	Suffix S Stainless Tank, Front and Door Digital Control	Stainless Back & Sides (SS) Add $	Approx Ship Wt. (lbs.)
SRTG-X (Single)	55,000	17.5	$26,200	$1,458	220 lbs.
SRTG-X2 (Dual)	110,000	17.5 ea	$48,668	$2,916	477 lbs.

Standard with Digital Thermostat, matchless ignition, automatic water fill, auxiliary manual fill, common drain/ overflow, stainless steel hinged tank cover(s), tube rack, 6" legs. Supplied with cord and plug

SOLSTICE RETHERMALIZER - ELECTRIC

Model Number	kW	Water Capacity (Gallons)	Suffix S Stainless Tank, Front and Door Digital Control	Stainless Back & Sides (SS) Add $	Approx Ship Wt. (lbs.)
SRTE14-GM (Single)	10.5 kW *	16.5	$26,200	$1,458	220 lbs.
SRTE14-2-GM (Dual)	10.5 kW ea*	16.5 ea	$43,654	$2,916	477 lbs.

Standard with Digital Thermostat, automatic water fill, auxiliary water fill, common drain/over flow, stainless steel hinged tank cover(s), element rack, 6" legs. No power cord supplied for single phase models, available at additional charge 3 phase. Electric service must be hard wired by a licensed electrician
*Power Rating is 8kW at 208V and 10.5kW at 240V

Power Cord and Plug - 6 foot, 4 Gauge power cord, with NEMA 15-60P plug. Option available for SRTE models 3 phase, 208V or 240V appliances only	$838

COUNTER TOP RETHERMALIZER - ELECTRIC

Model Number	KW	Water Capacity (Gallons)	Stainless Back & Sides (SS) Add $	Approx Ship Wt. (lbs.)
CRTE	6 kW	6	$10,272	60

FLOOR MODELS OPTIONS & ACCESSORIES

Description		List Price
Casters - 1/2 Set per tank, minimum 1 set		$889/set
Water Quick Disconnect- Self closing single hand operation water supply hose		$1,079
1/3 Pan Rails -Holds various sizes of hotel pans to keep foods warm	Set of 2 for single tank	$679
	Set of 3 for dual tank	$1,019

RACKS

Description	Part Number	List Price
8 product/Tall Vertical Food Rack	B4511001	$622
8 product/Vertical Food Rack	B4509402	$706
12 Product Horizontal Food Rack	B4513001	$452

SUITCASES

Food Product Suitcase/Narrow	B4511101	$269
Food Product Suitcase/Wide	B4511102	$261
Food Product Suitcase/Tall Narrow	B4513302	$419
Food Product Suitcase/Tall Wide	B4513301	$646
Suitcase, 2.50" Wide	B4516101	$529

BASKETS

B4511601	$1,091
B4511501	$444

CE approvals for individual models may not be available with all options or in all areas. Consult the factory for more information.

SOLSTICE SUPREME PASTA COOKER

GAS & ELECTRIC

- Gas Solstice Burner Technology, No Blower or Ceramics
- Gas Self Cleaning Burner System & Down Draft Protection (patented)
- High Efficiency Design
- Standard with 4 Button Digital Controller
- Rinse Faucet Standard on Rinse Station
- Now Includes Standard Water Fill
- Drain "T" Manifold Standard on Pasta Cookers Combined with Rinse Station

SSPE14/ SSRE14

Individual Portion Cups and Rack - (9) 4"x4" cups for use in gas or electric. For cooking or reconstituting of single portions.

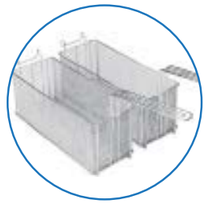

Oblong Baskets - 15-3/4" x 6" x 7" for use with any pasta cooker. Can also be used with dual basket lift. For cooking of smaller portions. Can be used as holding rack for small round baskets, 2 ea.

Bulk Baskets
Small 13-1/4" x 13-1/4" x 9" for use with gas or electric.Small bulk loads up to 5 lbs of dry pasta. Can also be used with single basket lift.

Round Baskets - 4-5/8" or 6-1/4" for use with gas or electric. Standard or fine mesh available. For cooking of various types of pasta or reconstituting of small portions.

SOLSTICE SUPREME PASTA COOKER - GAS

Model Number	BTUs	Water Capacity (Gallons)	All Stainless Steel	Approx Ship Wt. (lbs.)	Approx Cubic Feet
SSPG14	60,000	12	$29,459	250	55
SSRS14 Rinse Station	n/a	10	$13,392	136	17

SOLSTICE SUPREME PASTA COOKER - ELECTRIC

Model Number	BTUs	Water Capacity (Gallons)	All Stainless Steel	Approx Ship Wt. (lbs.)	Approx Cubic Feet
SSPE14	12.5	12	$23,589	177	17
SSRE14 Rinse Station	n/a	10	$13,392	136	17

SOLSTICE SUPREME PASTA COOKER OPTIONS & ACCESSORIES

Description	List Price
Quick Set Timer (can not be used with basket lifts)	$438
Single Basket Lift* (adds 4-1/2" to overall depth)	$3,269
Dual Basket Lift* (adds 4-1/2" to overall depth)	$6,536
Rinse Tank Insulation	$2,611
Drain "T" Manifold (specify when ordering)	N/A
Water Quick Disconnect	$1,079
Casters	$889
Water Saving Flow Regulated Mixing Valve (In addition to standard manual fill) - Available on Gas Units Only	$1,349
*Gas units with basket lifts must include casters	

CE approvals for individual models may not be available with all options or in all areas. Consult the factory for more information.

FLEXIBLE CONNECTORS (GAS QUICK DISCONNECT)

Gas quick disconnect couplings with flexible hose, restraining device and thermal shut-off

	Disconnect BTU Capacity			
Gas Connector Size	Single Units	Multiple Units	Part Number	List Price
3/4" x 36"	240,000	---	B8003102	$1,592
3/4" x 48"	240,000	---	B8003103	$1,770
1" x 36"	---	390,000	B8003105	$1,929
1" x 48"	---	390,000	B8003106	$2,199
1-1/4" x 36"	---	575,000	B8003108	$2,619
1-1/4" x 48"	---	575,000	B8003109	$2,936

FRYERS CLEANING ACCESSORIES

Description	Use	Part Number	List Price
Clean Out Rod	Used to clean fryer drain line	STD-A3301001, SELVA3881001 SSHLV-A3381003, SELV-A3381003	$104
Cleaner - 25 Lbs.	Extends the life of the fryer and shortening	P6071397	$643
Cleaning Brush	High temperature, Teflon cleaning brush	PP10056	$206
Crumb Scoop	Designed to fit between tubes and elements for removal of heavy sediment	Std-B7490701 Twin,SE-B5008101, SSHLV-B500812	$181
Fat Vat	Convenient, safe oil transport system holds 40 pounds (5.3 gallons)	D9109105	$2,515
Skimmer	Used for removing food particles from the oil surface	PP10725	$123

FILTER ACCESSORIES

Description	Use	Part Number	List Price
Filter Shovel Scoop	Used to remove debris from filter pan	B6681201	$138
Powder	Filter powder - 120, 8 oz. packets	PP10733	$325
Paperless Filter Assembly	(Priced as substitute for standard assembly in new filter system)	$1,012	

FILTER PAPER

Part Number	Model Number	Type	Paper Quantity	Gauge	Size	List Price
PP10613	Solstice Filter Drawer	Envelope	100	Heavy Duty	18-1/2" x 20-1/2"	$577
A6667104	SFSSH55/T/R, SFSG14R, SFSE14/T/R/TR, ROV Solo & Dual	Envelope	100	Heavy Duty	10" x 20-1/2"	$349
A6667105	ROV Triple and up	Envelope	100	Heavy Duty	14" x 22"	$393
P6071371	P14	Flat	100	Standard	13-1/2" x 24"	$363
PP10612	P14	Flat	100	Heavy Duty	13-1/2" x 24"	$455
P6071373	P18	Flat	100	Standard	17-1/2" x 28"	$464
PP10606	P18	Flat	100	Heavy Duty	17-1/2" x 28"	$580
A6667103	RP14 and RP18	Envelope	100	Heavy Duty	20-1/2 x 14-1/4"	$550

INSTITUTIONAL PACKAGES

Description	SG14R, SSH55/55R/55T, SSH60/60R, SE14/14R/14T	SSH75/75R, SSH60W/60WR, SE18/18R	MEGAFRY	FD Filter Drawer	BNB
Door Latch Assembly	Required	Required	Required		Required
16ga. Tank/Front panel cover assembly	Required	Required	Required		Required
Flanged legs	Required	Required	Required		Required
Stainless back	Required	Required	Required		Required
Gas - Total Add-on	$3,657	$3,866	$4,453	See Note 1	$3,062
Electric - Total Add-on	$4,067	$4,303	N/A	See Note 1	$3,485

- Locks and keys to be supplied by end user
- Not available with institutional package: Basket Lifts, Filter Flush Hose, Quick Disconnects, Casters, Fat Vat

NOTE 1: No modifications required for institutional packages on this product

- All exposed fasteners meet or exceed requirements set forth by the American Correctional Food Service association (Std. No. 1, section 1401)

TANK COVER CHART

Model Number	18 Gauge Cover	List Price (Each)
Without Basket Lifts		
SSHLV14, SSHLV14T, SELV14, SELV14T	B2101519	$601
SELV184, SSHLV184	B2101521	$789
SG14/14R, SGBNB14, SSH55/55T/55R/55TR, SSH60/60R	B2101501	$600
SGBNB18, SSH75/75R, SSH60W/60WR, VF65	B2101502	$789
SE14/14X/14R/14T	B2101505	$601
SE18/18R/184/184R	B2101506	$789
FBG18	B2101510	$844
FBG24	B2101511	$964
SGM24	B2101512	$964
35C+	B3307401	$601
45C+	B3307501	$601
65C+	B2100108	$789
E35	B2101508	$601
VF35	B2101518	$601
SGC	B2010504	$601
SSPG14	B2103001	$601
With Basket Lifts		
SSHLV14, SSHLV14T, SELV14, SELV14T	B2101519	$644
SELV184, SSHLV184	B2101521	$844
SG14/14R, SSH55/55T/55R/55TR, SSH60/60R	B2101603	$601
SG18, SSH75/75R, SSH60W/60WR	B2101604	$789
SE14/14X/14R/14T	B2101605	$601
SE18/18R/184/184R	B2101606	$789
SSPE14	B2100422	$601
SSPG14	B2103002	$601

CASTERS

Description	Fryer	Part Number	List Price
6" Swivel	Economy	B3901501	$889 set
9" Swivel	Solstice Supreme, SG, SE, VF35, VF65 & Flatbottom Fryers, Pasta Cookers, Rethermalizers, BNB, ROV Triple and up	B3901504	$889
9" Locking	Reduced Oil Volume Fryers, Solo and Dual	B3902304	$222
10" Rigid Non-locking	Solstice SoloFilters	B3902301	$222
10" Rigid Locking	Solstice SoloFilters	B3902303	$222 set
11" Swivel	MegaFry	B3901505	$889 set

SGBNB DUMP STATION

Standard with 4-5/8" recessed top/screen. Matches dimensions of fryer. Approximate shipping weight 150 pounds.

Description	Notes	List Price
Bread and Batter Dump Station 14"		$3,246
Bread and Batter Dump Station 18"		$3,306
PFW-1 Built-in Foodwarmer, 750watt		$2,110
PFW-2 Free Standing Foodwarmer, 500watt		$2,110
Scooped Pan Liner (in lieu of screen)	No Additional Cost - Specify at Point of Order	N/A
Flat Worktop	Call factory for availability n/c	N/A
Flush Worktop	Call factory for availability n/c	N/A

SPLASHGUARDS

Mounts on tank side to prevent splashing of oil from one unit to another. Consult factory for other height requirements

Description	List Price
6"	$419
8"	$467
10" (Economy Fryers Only)	$486
12"	$557
18"	$800

WORKSHELVES

Description	List Price
Call factory for specifications and availability	$1,786

BASKET & WIRE GOODS

Description	Part Number	Size	Type of Handle(s)	Quantity Per Tank	List Price (Each)	
Pasta Wire Goods						
Small Bulk Basket	B4510202	12 1/4" X 13 1/4" X 9"	Sides	1	$879	
Large Bulk Basket	B4512702	16" X 13 1/4 "X 10"	Sides	1	$1,150	
Round Basket 4 5/8" Fine Mesh	B4510002	4 1/5 ID	Front	6	$549	
Round Basket 4 5/8"	B4510001	4 1/5 ID	Front	6	$363	
Round Basket 6 1/4"	B4509901	6 1/4 ID	Front	4	$383	
Oblong Basket Stainless	B4509801	15 3/4" X 6" X 7"	Front	2	$608	
Individual Serving Baskets w/ rack	B9010006	9 Indiv. Baskets w/rack		1	$612	
Individual Serving Basket Only	P6071998	Single 4" X 4" Basket		9	$94	
Element Rack - Electric	B7611202			1	$363	
Tube Rack - Gas	B4510101			1	$352	
Twin Baskets Regular Mesh (Shipped standard with equipment)						
35/45C+S, SG14/14R, SSH55/55R, SE14/R VF35, ROV	P6072145	13 1/4" X 6 1/2 "X 5 3/4"D	Front	2	$237	
SE14T, SSH55T, 55TR	P6072145	13 1/4" X 6 1/2 "X 5 3/4"D	Front	1	$237	
65C+, SG18, SE18/18R, SSH75/75R, VF65	P6072184	17 1/4 "X 8 1/2" X 5 3/4"D	Front	2	$237	
SSH60/60R	A4500306	17 1/4 "X 6 1/2 "X 5 3/4"D	Front	2	$237	
SSH60W/60WR, SE184/184R	A4500305	13 1/4 X 8 1/2 "X 5 3/4"D	Front	2	$237	
Twin Baskets-Fine Mesh						
35/45C+S, SG14/14R, SSH55/55R, VF35, ROV	P6072146	13 1/4" X 6 1/2" X 5 3/4"D	Front	2	$478	
SG14T, SE14T/14TR, SSH55T, 55TR	P6072146	13 1/4" X 6 1/2" X 5 3/4"D	Front	1	$478	
65C+, SG18, SE18/18R, SSH75/75R, VF65	P6072188	17 1/4 "X 8 1/2 "X 5 3/4"D	Front	2	$594	
Square/Full Size Basket - Regular Mesh (optional in lieu of twin baskets with standard fryers)						
35/45C+S, SG14/14R, SSH55/55R, SE14/R, VF35	P6072143	13 1/4 "X 13 1/2 "X 5 3/4"D	Front	1	$607	
65C+, SG18, SE18/18R, SSH75/75R, VF65	P6072180	17 1/2" X 16 3/4" X 5 3/4"D	Sides	1	$616	
Square/Full Size Basket - Fine Mesh						
35/45C+S, SG14/14R, SSH55/55R, ROV, VF35	P6072144	13 1/4" X 13 1/2" X 5 3/4"D	Front	1	$567	
Triple Size Baskets						
45C+S, SG14/14R, SSH55/55R, SE14/R	P6072147	13 1/4" X 4 1/2 "X 5 3/4"D	Front	3	$226	$678 per set
65C+, SG18, SE18/18R, SSH75/75R	P6072185	17 1/4" X 5 1/2" X 5 3/4"D	Front	3	$260	$779 per set
SSH60W/60WR, SELV184, SSHLV184, SE184/184R	A4514901	13 1/4" X 5 5/8 "X 5 3/8"D	Front	3	$225	$674 per set
Quadruple Size Baskets						
SSH60W/60WR, SELV184, SSHLV184, SE184/184R	P6072147	13 1/4" X 4 1/2 "X 5 3/4"D	Front	4	$226	$678 per set
Tank Racks						
35C+, SGC, VF35	PP10434	13 1/2 "X 11 1/2"	---	1	$194	
65C+, SE18/18R, SSH75/75R	P6073186	17 1/2" X 17 1/2"	---	1	$194	
SG14/14R, 45C+, SSH55/55R, SE14/14R, 45C+	A4500601	13 1/2 "X 13 1/2"	---	1	$194	
SSH55T/55TR	B4511801	13 1/2 "X 6"	---	1	$194	
SSH60/60R, VF65	A4500604	13 1/2 "X 17 1/2"	---	1	$194	
SSH60W/60WR	A4500602	17 1/2" X 13 1/2"	---	1	$194	
SG18	B4511901	17 1/2 "X 17 1/2" Reversible		1	$194	
SE14T	B4512401	13 1/2 "X 6 3/4"	---	1	$194	
SSHLV14	A4500605	12-1/2" x 11-3/4"	---	1	$194	
SSHLV14T	B4511802	12-1/2" x 5-3/4"	---	1	$194	
SSHLV184	A4500606	12-1/2" x 15-3/4"	---	1	$194	

BASKET & WIRE GOODS

Description	Part Number	Size	Type of Handle(s)	Quantity- Per Tank	List Price
Tank Screen - Mesh					
SG18, SE18/18R, SSH75/75R	P6072186	17-1/2" x 17-1/2"	---	1	$224
SG14/14R, SSH55/55R, SE14/14R	A4500201	13-1/2" x 13-1/2"	---	1	$224
SE14T	B4512501	13-1/2" x 6"	---	1	$224
SGM24	P6072402	23-1/2" x 23-1/2"	---	1	$395
SSH60/60R, VF65, SE184/184R	A4500203	17-1/2" x 13-1/2"	---	1	$224
Drain Screen for Bread and Batter Cabinet (Dump Station)					
SGHLVBNB, SEHLVBNB	B4508109	---	---	---	$395
SGBNB14,SSHBNB14	B4508108	---	---	---	$395
SGBNB18,SSHBNB18	B4508107	---	---	---	$500
SEBNB14	B4508111	---	---	---	$395
SEBNB18	B4508110	---	---	---	$500
Fish Grids					
SG14/14R, SE14/14R, SSH55/55R	B7425301	13-1/2" x 13-1/2"	---	---	$1,061
SG18, SE18/18R, SSH75/75R	B7425401	17-1/2" x 17-1/2"	---	---	$1,584
SSH60	A5073001	13-1/2" x 17-1/2"	---	---	$1,095
SSH60W	A5073101	17-1/2" x 13-1/2"	---	---	$1,095
Megafry Baskets					
Large Megafry Basket	A4514702	23-1/4" x 10" x 5-3/4"	Front/Back	---	$896
Small Megafry Basket	A4514701	23-1/4" x 5-3/4" x 5-3/4"	Front/Back	---	$781

MEGAFRY OPTIONAL BASKET CONFIGURATION TABLE

	Basket Size/Quantities	
Model Number	23-1/4" x 5-3/4" x 5-3/4"	23-1/4" x 10" x 5-3/4"
SGM24	4	0
SGM24	2	1
SGM24	0	2

ROV RACK FRYER ACCESSORIES - (see page 6 for accessories included with fryer)

Model Number	Part Number	List Price
Rack Holder	B5055702	$201
Product Rack - 12" x 16" x 1"	B5009201	$201
Product Basket - 12" x 16" x 2"	B5055201	$201

P6072145

B4510001

P6072147

START-UP:

We now offer prepaid start-ups!

- Just $350 for the first serial number and $115 for each additional serial number at the same location!
- Purchase on your original equipment order and our ASAPD will:

Complete a performance check

- ✓ Boil out the fryer(s)
- ✓ Fill the unit with oil
- ✓ Calibrate as needed
- ✓ Check for proper installation
- ✓ Check for proper performance

- A Start-up must be emailed to Pitco Service at least 5 business days prior to requiring the service at techservice@pitco.com or fill out a form online at www.pitco.com/startup_request
- The Start-up is to be completed prior to the customer using the equipment
- All required utilities and associated supporting equipment such as hoods, drains and fire protection equipment must be in place and operational prior to starting up the equipment
- Start-ups are to be performed during normal business hours. 8AM - 5PM.
- Extended Travel fee may apply outside of major metro areas
- Additional fees may be charged for time during security clearance or after hours if needed

EXTENDED WARRANTY:

We now offer extended warranties!

- Extend your Pitco Factory warranty for a full year! Call your Pitco customer service rep for pricing! United States only

ORIGINAL ECONOMY EQUIPMENT LIMITED WARRANTY

GENERAL WARRANTY

Pitco Frialator, LLC warrants to the original user of its commercial cooking appliances and related equipment that said appliances and related equipment will be free from defects in material and workmanship under normal use for a period of one (1) year from the date of installation, with appropriate documentation, to a maximum of fifteen (15) months from the date of manufacture, subject to the following additions, exceptions, exclusions and limitations.

What is covered

This warranty is limited to the repair or replacement at the Company's option, without charge, of any part found to be defective within the warranty period and reasonable expenses incurred for freight and material for the installation of such part; in addition, the Company's obligation shall be limited to reimbursement for normal labor on such parts. Pitco Frialator, LLC agrees to pay the Authorized Service and Parts Distributor, for any labor and material required to repair or replace, at the Company's option, any part which may fail due to defects in material or workmanship during the above general warranty period.

How to Keep Your Warranty in Force

- Make sure any shipping damages are reported immediately. Damages of this nature are the responsibility of the carrier and must be reported by the receiver.
- Install the unit properly. This is the responsibility of the installer and the procedures are outlined in the manual.
- Do not install it in a home or residence.
- Maintain it properly. This is the responsibility of the user of the appliance and the procedures are outlined in the manual.
- Adjustments, such as calibration, leveling, tightening of fasteners or plumbing or electrical connections normally associated with initial installation. These procedures are outlined in the manual and are NOT covered by warranty.
- If it is damaged due to flood, fire or other acts of God, this is not covered under this warranty.
- Use it for what it is intended. If it is used for a purpose other than for which it was intended or designed, resulting damages are not covered under the warranty.
- Make sure that it has the correct voltage, gas supply and/or good quality water. If a failure is due to poor water quality, harsh chemical action, erratic voltage or gas supplies, these damages are not covered under the warranty.
- Do not materially alter or modify from the condition in which it left the factory.
- Do not obliterate, remove or alter the serial number rating plate.
- Use only Genuine OEM parts from Pitco Frialator, LLC or its Authorized Parts and Service Distributors. Non-OEM parts or repairs made by Non-Authorized Service and Parts Distributors are not covered by the warranty.
- If any other failure occurs which is not attributable to a defect in materials or workmanship, it is not covered.
- Food truck & mobile installations may void warranty. Combustion related issues will not be covered.

This warranty specifically excludes parts which wear or would be replaced under normal usage, including, but not limited to, lamps, fuses, interior or exterior finishes, o-rings, gaskets, wire goods. Filter hoses and wash wands are

warrantied for 90 days from installation.

Limits to the Warranty

Outside the United States of America and Canada, this warranty is limited to the replacement of parts and Pitco Frialator, LLC will not bear any other expense be it labor, mileage, freight or travel.
In the United States of America and Canada, this warranty will cover up to 100 miles and two hours of round trip travel charges. Any excess travel is billable to the location.
If any oral statements have been made regarding the appliance, these statements do not constitute warranties and are not part of the contract of sale. This limited warranty constitutes the complete, final and exclusive statement with regard to warranties.
THIS LIMITED WARRANTY IS EXCLUSIVE AND IS IN LIEU OF ALL OTHER WARRANTIES WHETHER WRITTEN, ORAL OR IMPLIED, INCLUDING, BUT NOT LIMITED TO ANY WARRANTY OF MERCHANTABILITY OR FITNESS FOR A PARTICULAR PURPOSE OR WARRANTY AGAINST LATENT DEFECTS.

Limitations of Liability

In the event of a warranty or other claim, the sole obligation of Pitco Frialator, LLC will be the repair or replacement, at the Company's option, of the appliance or the component part. This repair or replacement will be at the expense of Pitco Frialator, LLC except as limited by this warranty statement. Any repair or replacement under this warranty does not constitute an extension in time to the original warranty. Parts covered under this warranty will be repaired or replaced, at the Company's option, with new or functionally operative parts. The liability of Pitco Frialator, Inc. on any claim of any kind, including claims based on warranty, express or implied contract, negligence, strict liability or any other legal theories will be exclusively the repair or replacement of the appliance. This liability will not include, and the purchaser specifically renounces any right to recover special, incidental, consequential or other damages of any kind, including, but not limited to, injuries to persons, damage to property, loss of profits or anticipated loss of the use of this appliance.
If any provision of this warranty is unenforceable under the law of any jurisdiction, that provision only will be inapplicable there, and the remainder of the warranty will remain unaffected. The maximum exclusion or limitation allowed by law will be substituted for the unenforceable provision.

How to Obtain Warranty Service

First direct your claim to the Pitco Frialator, LLC Authorized Service and Parts Distributor, www.pitco.com/serv.asp closest to you giving complete model, serial and code numbers, voltage, gas type, and description of the problem. Proof of the date of installation and/or the sales slip may also be required. If this procedure fails to be satisfactory, write the National Service Manager, Pitco Frialator, LLC, P. O. Box 501, Concord, NH. 03302-0501. USA

This warranty gives you certain specific legal rights; you may have other rights which vary from state to state.

SALES REPRESENTATIVES

STATE	ZIP CODE	REP
Alabama		7
Alaska		15
Arizona		04
Arkansas		7
California		13
Colorado		04
Connecticut		
	060-063	01
	0641-0642	01
	0643	12
	0644-0648	01
	0649	12
	065, 067	01
	066, 068-069	12
Delaware		11
District of Columbia		14
Florida		
	324-325	7
	All other zip codes	03
Georgia		7
Hawaii		15
Idaho		15
Illinois		
	600-619	09
	620, 622	02
	623-628	09
	629	02
Indiana		
	463-464	09
	All other zip codes	02
Iowa		08
Kansas		08
Kentucky		02
Louisiana		07
Maine		01
Maryland		14
Massachusetts		01
Michigan		02
Minnesota		23
Mississippi		07
Missouri		08
Montana		15
Nebraska		08
Nevada		13

1 C.R. Peterson Associates
355 Bodwell Street Suite A
Avon, MA 02322
Tel: (508) 238-8821
Tel: (800) 257-4040
Fax: (508) 238-3647
www.crpeterson.com

2 Gabriel Group East
601 5th St. NW #400
Grand Rapids, MI 49504
Tel: (616) 583-9720
www.gabrielgrp.com

3 Eaton Marketing & Associates
5325 115th Avenue North
Clearwater, FL 33760
Tel: (727) 531-0899
Fax: (727) 531-2906
www.eaton-marketing.com

4 Hansen Group Rockies
4925 E. 38th Avenue
Denver, CO 80207
Tel: (303) 750-3727
Fax: (303) 750-0052
www.thehansengroup.net

5 Chrane Foodservice
9155 Sterling St Ste. 140
Irving, TX 75063
Tel: (844) 925-1239
www.chranefs.com

6 Hansen Group Carolinas
1935 S Main St, Suite 102
Salisbury, NC 28144
Tel: (704) 603-4556
www.thehansengroup.net

7 Hansen Group
1770 Breckinridge Pkwy
Suite 500
Duluth, GA 30096
Tel: (770) 667-1544
www.thehansengroup.net

8 Chrane Foodservice Midwest
407 Droste Road
St. Charles, MO 63301
Tel: (866) 796-3399
www.chranefs.com

9 The Jay Mark Group
175 Lively Blvd.
Elk Grove Village, IL 60007
Tel: (847) 545-1918
Fax: (847) 545-1932
www.jaymark.net

10 Link2 Hospitality Solutions
108 Lincoln Parkway
East Rochester, NY 14445
Tel:(585) 254-1780
Fax: (585) 254-2154
www.link2hs.com

11 One Source
800 Calcon Hook Rd.
Sharon Hill, PA 19079
Tel: (610) 565-5200
Fax: (610) 565-0725
www.osreps.com

12 CR Peterson South
355 Bodwell St Suite A
Avon, MA 02322
Tel: (508) 238-8821
Tel: (800) 257-4040
Fax: (508) 238-3647
www.crpeterson.com

13 Preferred Foodservice Specialists
20715 Dearborn Street
Chatsworth, CA 91311
Tel: (818) 998-9292 (South)
Tel: (415) 854-6428 (North)
www.preferredfs.com

14 Schmid Wilson Group
2545 Lord Baltimore Drive, Suite E
Windsor Mill, MD 21244
Tel: (410) 998-9191
www.theswg.com

15 RHI Solutions
5628 Airport Way S, Ste 250
Seattle, WA 98108
Tel: (425) 251-0531
www.rhi-solutions.com

16 Anderson Foodservice Solutions
N8W22520 Johnson Dr. Suite K
Waukesha, WI 53186
Tel: (262) 436-0102
www.asfreps.com

17 W.D. Colledge
3220 Orlando Drive, Unit 3
Mississauga, Ontario L4V 1R5
Tel: (905) 677-4428
Fax: (905) 677-5357
www.wdcolledge.com

18 W.D. Colledge
134 Bainbridge Cr
Edmonton, Alberta T5T 6B4
Tel: (780) 444-8928
www.wdcolledge.com

19 W.D. Colledge
1004 - 151 West 2nd St.
North Vancouver, BC V7M 3P1
Tel: (604) 787-0335
www.wdcolledge.com

20 W.D. Colledge
23 Bisset Cr
Winnipeg, MB, R2Y 1B7
Tel: (604) 999-8579
www.wdcolledge.com

21 W.D. Colledge
1422 Purcells Cove Road
Halifax, Nova Scotia B3P 1B5
Tel: (902) 456-5175
www.wdcolledge.com

22 W.D. Colledge
8586A Lemieux St
LaSalle, Quebec H8N 2B6
Tel: (514) 365-3753
Fax: (514) 365-0761
www.wdcolledge.com

23 Gabriel Group West
601 5th St. NW #400
Grand Rapids, MI 49504
Tel: (616) 583-9720
www.gabrielgrp.com

STATE	ZIP CODE	REP
New Hampshire		01
New Jersey		
	070-079	12
	080-086	11
	087-089	12
New Mexico		04
New York		
	063	1
	100-119	12
	All other zip codes	10
North Carolina		06
North Dakota		23
Ohio		02
Oklahoma		05
Oregon		15
Pennsylvania		
	150-165	02
	All other zip codes	11
Rhode Island		01
South Carolina		06
South Dakota		23
Tennessee		07
Texas		
	798-799	04
	All other zip codes	05
Utah		04
Vermont		01
Virginia		14
Washington		15
West Virginia		02
Wisconsin		16
Wyoming		
	834	15
	All other zip codes	04

CANADA	
Alberta	18
British Columbia	19
Manitoba	20
Newfoundland	21
New Brunswick	21
Nova Scotia	21
Prince Edward Island	21
Saskatchewan	20
Ontario	17
Quebec	22

ORDERING INFORMATION

PLEASE PROVIDE THE FOLLOWING INFORMATION:

- Complete Bill To/Ship To address
- Ultimate destination of equipment
- Purchase order number
- Requested ship dates and carrier
- Any special instructions
- Indicate Mark For
- CE approval required

INFORMATION FOR EQUIPMENT:

- Gas Type (natural or propane)
- Voltage/Phase
- Altitude requirements
- Model number
- Fryer/Filter line-up

NOTE: FRYERS NOT AVAILABLE FOR CURB MOUNT

TERMS AND CONDITIONS

▪Prices are LIST PRICES F.O.B factory, Concord, NH and do not include freight charges or installation
▪Subject to a 35% fee if cancelled within 48 hours of ship date
▪Freight Classification: Class 85
▪Prices and specifications are subject to change

ADDITIONAL CHARGES:

Call Before Delivery = $65.00
Inside Delivery = $125.00
Lift Gate Delivery = $150.00
Construction Site Delivery = $150.00
Residential Delivery = $125.00
All other requests, call for pricing

CHANGES

Additional costs incurred due to changes requested within two weeks of scheduled shipping date will be chargeable.

RETURNS

Prior authorization must be received in order to return merchandise. Please contact Customer Service. Credit will be issued for returned product less initial delivery freight cost. All authorized returns must be freight prepaid and are subject to a 35% restocking charge. All authorized returns will be paid by credit memo. Refurbishing, if necessary, will be an additional charge and will be deducted from any credit that may be allowed.Items not stocked, specially configured or built to order do not qualify for return.Any specials that are authorized for return may be subject for a fee beyond the standard restocking fee. Returns must be received at the assigned return address within sixty (60) days from authorization date. Pitco reserves the right to refuse or charge a 45% restocking fee on equipment returned without prior authorization.

Returned Goods Authorization (RGA) must accompany all returns. All returns must be shipped prepaid within 30 days of authorization and must be in proper crating.

Custom options are non-refundable, non returnable items.

Title passes to the consignee when merchandise is accepted by the carrier and therefore travels at the risk of the purchaser. FOB factory.

INTERNATIONAL ORDERS

Please contact your Pitco Customer Service Representative for specific details.

CHECK YOUR ORDER STATUS ONLINE
To speak to a Customer Service Representative call: +1 603.225.6684
https://www.pitco.com/order-lookup/
Email orders: orderpitco@pitco.com